# FUNDAMENTALS OF MACHINE DESIGN

## SUBJECT CODE :- 3141907

## TUTORIAL: 5

## Design of Shafts and Keys

### Section-A Descriptive type Questions

1. Explain functions and classification of shaft.
2. Compare the weight, strength and rigidity of a hollow shaft of same external diameter as that of solid shaft, Both the shaft are made of same material. Assume that the diameter ratio for the hollow shaft as 0.6.
3. What do you understand by tensional rigidity and lateral rigidity?
4. What are the basic functions of the key? What is splined shaft?
5. State the difference between shaft, axle and spindle.
6. What are the different types of sunk key? Explain each with application.

### Section-B Numerical type Questions

1. Find the diameter of a solid shaft to transmit 30 kw at 230 rpm.The shear stress is 50 MPa. If a hollow shaft is to be used in place of solid shaft , find the inside and outside diameter when the ratio of inside to outside diameter is 6:8.
2. A 45mm diameter shaft is made of steel with a yield strength of 400 $N/mm^2$. A parallel key of size 14 mm wide and 9 mm thick made of steel with a yield strength of 340 $N/mm^2$ is to be used. Find the required length of key, if the shaft is loaded to transmit the max. permissible torque. Use max. shear stress theory and assume F.O.S. = 2
3. A 600 mm diameter pulley transmits 16 kW power at a speed of 400 rpm. Pulley is cantilever at a distance of 200 mm from the nearest bearing. The weight of the pulley is 1500 N. It is driven by a horizontal belt drive. The co-efficient of friction between belt and pulley is 0.3 and the angle of lap $180^0$. Take the fatigue and shock factors as Kb = 2.0 and Ks = 1.5. Determine the shaft diameter.
4. A horizontal shaft AD supported in bearings at A and B and carrying pulleys at C and D is to transmit 75 kW at 500 r.p.m. from drive pulley D to off-take pulley C, as shown in Fig. Calculate the diameter of shaft. The data given is : P1 = 2 P2 (both horizontal), Q1 = 2 Q2 (both vertical), radius of pulley C = 220 mm, radius of pulley D = 160 mm, allowable shear stress = 45 MPa.

# FUNDAMENTALS OF MACHINE DESIGN

## SUBJECT CODE :- 3141907

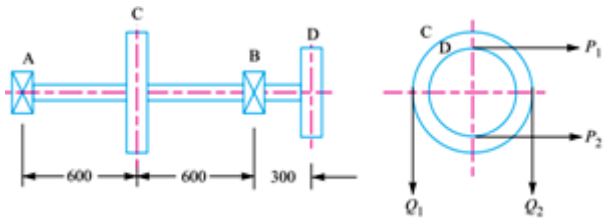


**5.** Design a shaft to transmit power from an electric motor to a lathe head stock through a pulley by means of belt drive. The pulley weighs 200 N and is located at 300 mm from centre of bearing. The diameter of pulley is 200 mm and maximum power transmitted is 1 kW at 120 rpm. The angle of lap of belt is 180° and coefficient of friction between belt and pulley is 0.3. The shock and fatigue factors for bending and twisting are 1.5 and 2.0 respectively. The allowable shear stress for shaft is 35 MPa

**6.** A belt driven C.I pulley of 0.9 m diameter overhangs the bearing by 0.2 m as shown in figure. The pulley is driven from the bottom by a belt. The angles of lap and tension on tight side are 180° and 2600 N respectively. The weight of pulley is 600 N. Assume co-efficient of friction between pulley and belt is 0.25. Shaft is made up of 30C8. $y_{ts}$ =400 N/mm², $u_{ts}$ =500 N/mm² Determine the shaft diameter according to ASME code. Take Ks=1.0, Kb=1.5.

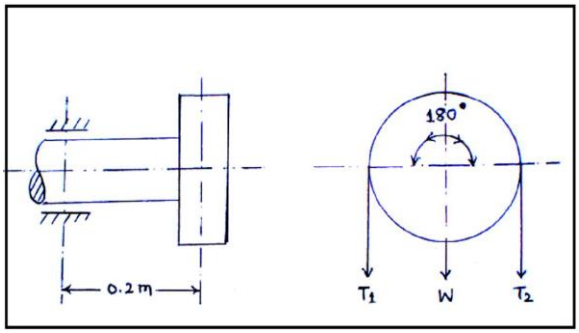


**7.** A 45mm diameter shaft is made of steel with a yield strength of 400 N/mm2. A parallel key of size 14 mm wide and 9 mm thick made of steel with a yield strength of 340 N/mm2 is to be used. Find the required length of key, if the shaft is loaded to transmit the max. permissible torque. Use max. shear stress theory and assume F.O.S. = 2